Instructions for use

HOME DELUXE
WIR MACHEN DEIN ZUHAUSE

Polyrattan hanging chair CIELO



Original instructions for use

Designed in Germany

Table of contents

1. General information ... 3
1.1. Product overview ... 3
1.2. General notes ... 4
1.3. Guarantee ... 4
2. Information on the instructions for use ... 4
2.1. Availability of the instructions for use ... 4
2.2. Target groups of the instructions for use ... 4
2.3. Information on the translation ... 5
2.4. Explanation of symbols ... 5
2.5. General information on the instructions for use ... 5
2.6. Intended use ... 6
2.7. General safety instructions ... 6
3. Product features ... 7
3.1. Technical data ... 7
3.2. Product description ... 7
4. Scope of delivery ... 8
5. Assembly ... 9
5.1. Safety instructions ... 9
5.2. Structure of the product ... 10
5.3. Accessories ... 12
6. Application ... 12
6.1. Safety instructions ... 12
6.2. Initial commissioning ... 13
6.3. Operation ... 13
6.4. Storage location ... 13
7. Troubleshooting ... 13
8. Maintenance and care ... 14
8.1. Safety instructions ... 14
9. Dismantling ... 14
9.1. Safety instructions ... 14
10. Waste disposal ... 14

Dear customer,

Thank you for choosing a product from **Home Deluxe GmbH**. We hope you enjoy your new CIELO polyrattan hanging chair.

The instructions for use support you in the installation, commissioning, operation and maintenance of the product. The instructions for use and the safety instructions must be read carefully and in full. Observe these instructions to avoid hazards.

1. General information

1.1. Product overview

Model: Polyrattan hanging chair CIELO	**Article ID**	**Variant ID**
Polyrattan hanging chair CIELO	6847	5086
Polyrattan hanging chair CIELO (basket)- Combi package 1	8123	6277
Polyrattan hanging chair CIELO (cushion brown) - Package 2	7230	5453
Polyrattan hanging chair CIELO (base, accessories, black) - Combi package 3	14860	23292
Polyrattan hanging chair CIELO (arm, black) - Combi package 4	14861	23293
Polyrattan hanging chair CIELO - basket only	8584	6731
Polyrattan hanging chair CIELO - Cushions only	16987	31873
Polyrattan hanging chair CIELO - With rain cover	8809	6951
Polyrattan hanging chair CIELO - Black	21362	50923
Polyrattan hanging chair CIELO - Black (cushion) package 2	21363	50924
Polyrattan hanging chair CIELO - Black only basket	21364	50925
Polyrattan hanging chair CIELO - Black only cushions	21365	50926
Polyrattan hanging chair CIELO - Black with rain cover	21366	50927
Cushion cover set black polyrattan hanging chair CIELO	26034	62092

1.2. General notes

In order to fulfil our claim, we are constantly improving quality, simplifying installation and operation and adapting the products to customer requirements. Due to these changes, the current version of the instructions for use can be found on our homepage.

The term "product" is used in the instructions for use for the "CIELO polyrattan hanging chair".

1.3. Guarantee

The statutory liability for defects and warranty rights apply from the date of purchase.
Home Deluxe GmbH accepts no liability for damage caused by non-compliance with the instructions for use. Complaints arising from improper installation or use are excluded from the warranty. In the event of defects in the product, please contact our customer service in writing using the contact form on our homepage, stating the product name, serial number and a photo of the type plate:

Home Deluxe GmbH
Schanzeweg 2
32312 Lübbecke
Germany
Tel: +49 (0)5743 6181-0
www.home-deluxe-gmbh.de

If you have any further questions, please contact our customer service team using the contact form.

2. Information on the instructions for use

2.1. Availability of the instructions for use

The instructions for use are part of the product and should be kept complete and in the immediate vicinity of the product.

2.2. Target groups of the instructions for use

The instructions for use must be read and observed by every person involved in one of the following activities or uses:

- Unpacking
- Assembly / Installation
- Commissioning / Operation
- Maintenance / inspection / care
- Troubleshooting / repair
- Waste disposal

2.3. Information on the translation

The original instructions for use were written in German. Any other language available is a translation of the German version.

2.4. Explanation of symbols

Symbol	Explanation of symbols
	**WARNING** The symbol indicates possible dangers that could result in fatal or serious injuries. Before carrying out the corresponding installation or application step, read the corresponding note.
	**INFO** The symbol provides important information and indicates material damage. Observe these before carrying out the corresponding installation or application step in order to understand problems and avoid damage.
	**Read instructions for use** The symbol indicates that the operating instructions must be read carefully before mounting/installing and/or operating the appliance.

2.5. General information on the instructions for use

The instructions for use refer to the CIELO polyrattan hanging chair. It contains important information on assembly, operation, maintenance and cleaning. The instructions for use, in particular the safety instructions, must be read carefully before using the product; keep the instructions for use in a safe place. Only use the product as described in these instructions for use to prevent accidental injury or damage. If the product is passed on to third parties, these instructions for use must also be handed over.

2.6. Intended use

The product is of high quality, durable and intended or suitable exclusively for use in private households to a reasonable and customary extent. Furthermore, our product is **not** intended for commercial use. Commercial use is only permitted with the written authorisation of Home Deluxe GmbH.
The product is intended solely as a seat and must not be used as play equipment for children.
Only use the product as described in these instructions for use. Any other use is considered improper and may result in damage to property or personal injury. The manufacturer accepts no liability for damage caused by improper or incorrect use.

2.7. General safety instructions

General hazard warnings



- Improper handling can lead to considerable personal injury and damage to property. For this reason, installation, commissioning, troubleshooting, maintenance and repair work may only be carried out by qualified persons.
- **Only** install the product if the scope of delivery is complete and in perfect condition.
- Ensure that all parts are undamaged and correctly installed. There is a risk of injury if they are not installed correctly. Damaged parts can affect safety and function.
- Only place the product on a safe, level and firm surface.
- Do not make any changes to the product
- Check the fastening at regular intervals.

Danger for children



- **Choking hazard!** Keep children away from packaging materials.
- Keep children away from the assembly site while the product is being assembled. The scope of delivery contains small parts that can be swallowed or cause serious injury.
- **Risk of tipping over!** The product is not a children's toy, climbing wall or sports equipment. The individual elements of the product can topple over when loaded on one side, which can result in death.
- Children can injure themselves when playing with the product or when pulling up on the product
- Do not place the product directly or in the immediate vicinity of a play area.
- Explain to the children how to use the product correctly and never leave them unsupervised while playing.
- Remove all sharp objects, broken glass or stones from the vicinity of the product. Ensure that children at play are not at risk.
- Make sure that small children do not put small parts in their mouths.

Risk of injury
Improper handling of the product can lead to injuries



- Check the product for visible damage before each use.
- Do not make any design changes to the product. Any modifications must be authorised in writing by the manufacturer and carried out in accordance with the instructions.
- Ensure that the product is permanently installed securely to avoid injury.

Risk of damage



- Improper handling of the product can lead to damage.
- Do not open the packaging with sharp objects (e.g. knives, scissors or similar) as this may damage the product. Be careful when opening.
- **Danger of tipping!** Do not climb onto the product.
- Do not use the product near sources of heat or naked flames.

Explosion hazard



- **Caution**: Do not store highly flammable, combustible or explosive substances inside the product. Highly flammable substances can catch fire.

3. Product features

3.1. Technical data

Polyrattan hanging chair CIELO	
Total height	approx. 200 cm
Base diameter	approx. 104 cm
Total basket height	approx. 123 cm
Basket width	approx. 100 cm
Powder-coated steel frame with a diameter of 50 x 1.2 mm	
Weight	26.1 kg
Max. Load capacity	120 kg
Rain cover material	Oxford polyester 600D 120g /m², 100 % waterproof
Thickness of the seat cushion	16 cm
Thickness of the cushion	12 cm

3.2. Product description

Make the most of the space and get cosy alone or as a couple. With gentle vibrations from a spring-loaded suspension, the product puts you in a pleasant state of calm. The product is extremely hard-wearing, weather-resistant and elegantly shaped, making it suitable for any setting. The metal frame is stable and extra sturdy. The product is durable, robust and extremely stable.

4. Scope of delivery

Check the packaging for external damage on delivery. Furthermore, immediately after unpacking, check that the scope of delivery is complete and that the product and all components are in perfect condition. Only assemble the product if the scope of delivery is complete and undamaged.

Components/parts

No.	Description of the	Quantity	Illustration
A	Basket	1	
B	Arm	1	
C	Stand	1	
D	Chain incl. snap hook	1	
E	Spring	1	
F	Spring bolt	1	
G	Fastening screws (M8 x 60 mm)	2	
H	Rain cover (optional)	1	

No.	Description of the	Quantity	Illustration
I	Mother	4	
J	Seat cushion / head cushion	1	 

Note:

- The mounting accessories are located in the base of the product.

5. Assembly

5.1. Safety instructions

All health and safety information must be read.

Risk of injury

Improper handling during installation can lead to injuries

- Your product will be delivered in several parcels. Be very careful when opening the parcels.
- **Only** install the product if the scope of delivery is complete and in perfect condition.
- Only place the product on a safe, level and firm surface.
- Make sure there is enough space to set up and install the product.
- Always observe the mounting dimensions and use the mounting material supplied.
- Operating errors, assembly errors or damage caused by assembly are excluded from the warranty.
- At least 2 people are required to assemble the product.
- **Risk of crushing!** Fingers can be crushed if you are not careful.
- Wear protective clothing such as safety shoes and protective gloves during assembly.

5.2. Structure of the product

The product is delivered disassembled and can be assembled with little effort. Follow the assembly instructions carefully. If the instructions are not followed, the function and safety of the product cannot be guaranteed.

Tools required

	Cutter knife	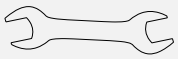	Spanner

- The following instructions must be read carefully.
- Carefully unpack the product.

Illustration	Build-up step
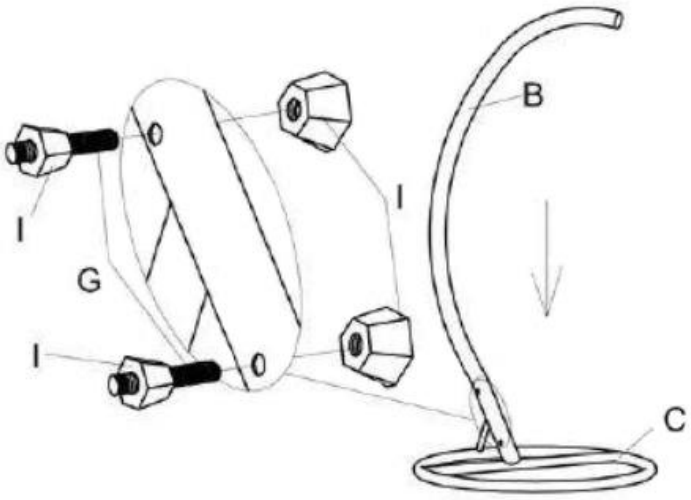	**Step 1:** Place the stand (**C**) on the floor). Slide the arm (**B**) with the two holes into the holder of the stand (**C**). The holes in the arm and base must be congruent. Push the fastening bolt (**G**) through the holes. Screw all the nuts onto the fastening bolts and tighten them. **Caution!** The conical side of the nut must be fitted pointing towards the arm.
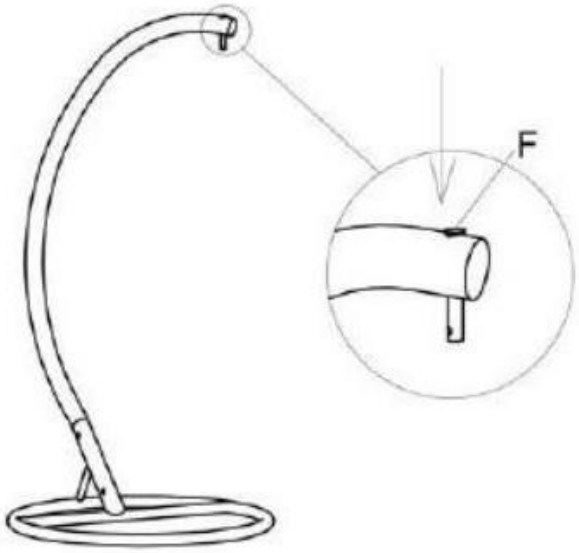	**Step 2:** Insert the spring bolts (**F**) from above through the hole provided.

Illustration	Build-up step
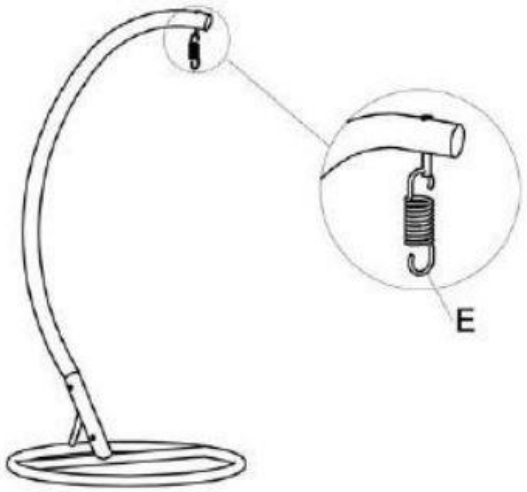	**Step 3:** Guide the spring (**E**) through the holes in the spring holder.
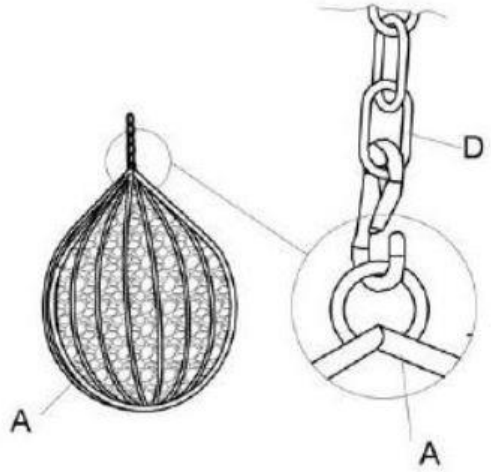 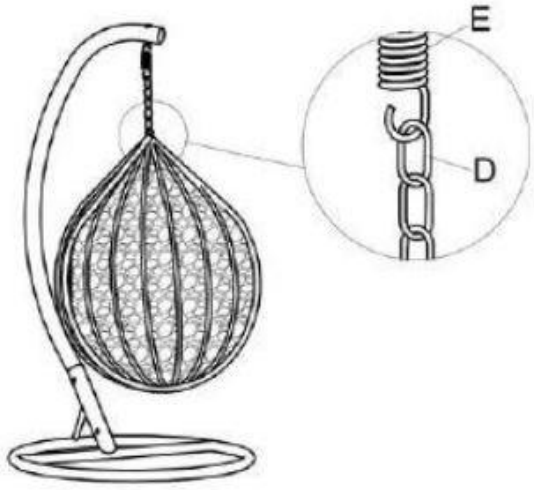	**Step 4:** The chain with the snap hooks is already pre-assembled. Place the snap hook (**D**) on the spring (**E**). Attach the basket (**A**) to the snap hook **(D**).

Illustration	Build-up step
	**Step 5:** Place the seat cushion (**J**) in the basket (**A**) and attach the cushions to the back of the wickerwork.

5.3. Accessories

Matching accessories: rain cover in various colours

6. Application

6.1. Safety instructions

The following health and safety information must be read carefully.

Risk of injury
Improper handling during operation can lead to injuries

- Do not use a damaged product.
- Do not make any changes to the product.
- The product is not a children's toy, climbing wall or sports equipment. Children are not permitted to play with the product.
- **Risk of crushing!** Fingers can be crushed if you are not careful.
- Check the fastening at regular intervals.

Risk of damage

- To avoid damage, keep pets away from the product

6.2. Initial commissioning

Check the product for damage before using it for the first time. The product may only be used if it is undamaged.

6.3. Operation

Check before using the product,

- the proper condition.
- that all fastenings are tightened.
- that the function of the spring is given.
- that the basket is mounted correctly.

6.4. Storage location



- During the winter season, store the product and its accessories in a dry, well-ventilated place that is protected from the weather as far as possible.
- Pull the rain cover over the product for storage.

7. Troubleshooting

If the following faults occur during operation, please check the causes of the fault using the table below. If the fault cannot be rectified by the measures listed, take the product out of operation.

Error	Possible cause	Solution
The stand wobbles or swings	- The product stands on uneven surfaces - The fastening screws have come loose	- Place the product on a level surface - Tighten the fastening screws
The product hangs askew	- Spring is unhooked - Chain with snap hook is not hooked in evenly	- Check and mount the spring - Attach chain with snap hooks of the same length

If another problem occurs with the product, please contact us.

8. Maintenance and care

8.1. Safety instructions

Risk of injury
Improper handling during operation can lead to injuries



- Clean the surfaces with a damp cloth and a mild detergent. Do not use aggressive cleaning agents or high-pressure cleaners for cleaning.
- Also observe the instructions of the detergent manufacturer.

9. Dismantling

9.1. Safety instructions

Risk of injury
Improper handling during disassembly can lead to injuries



- The product has a high weight and large dimensions, at least 2 persons are required for disassembly.
- Secure the product against falling before dismantling.

Disassembly of the product must be carried out in reverse order to assembly. (**see chapter Assembly**)

10. Waste disposal



- Dispose of the product and all components in accordance with local and country-specific regulations to prevent damage to the environment.
- Our packaging is made from environmentally friendly materials. They can be recycled and thus serve as valuable raw materials. Dispose of the packaging material (cardboard, dirty packaging, etc.) separately and professionally in accordance with the applicable national regulations.
- Contact the manufacturer if you are unsure about disposal.
- You can also obtain information on proper disposal from the local waste disposal centres.

Home Deluxe GmbH
Schanzeweg 2
32312 Lübbecke
Germany
Tel: +49 (0)5743 6181-0
www.home-deluxe-gmbh.de

GA-400-00-CIELO
2025/03